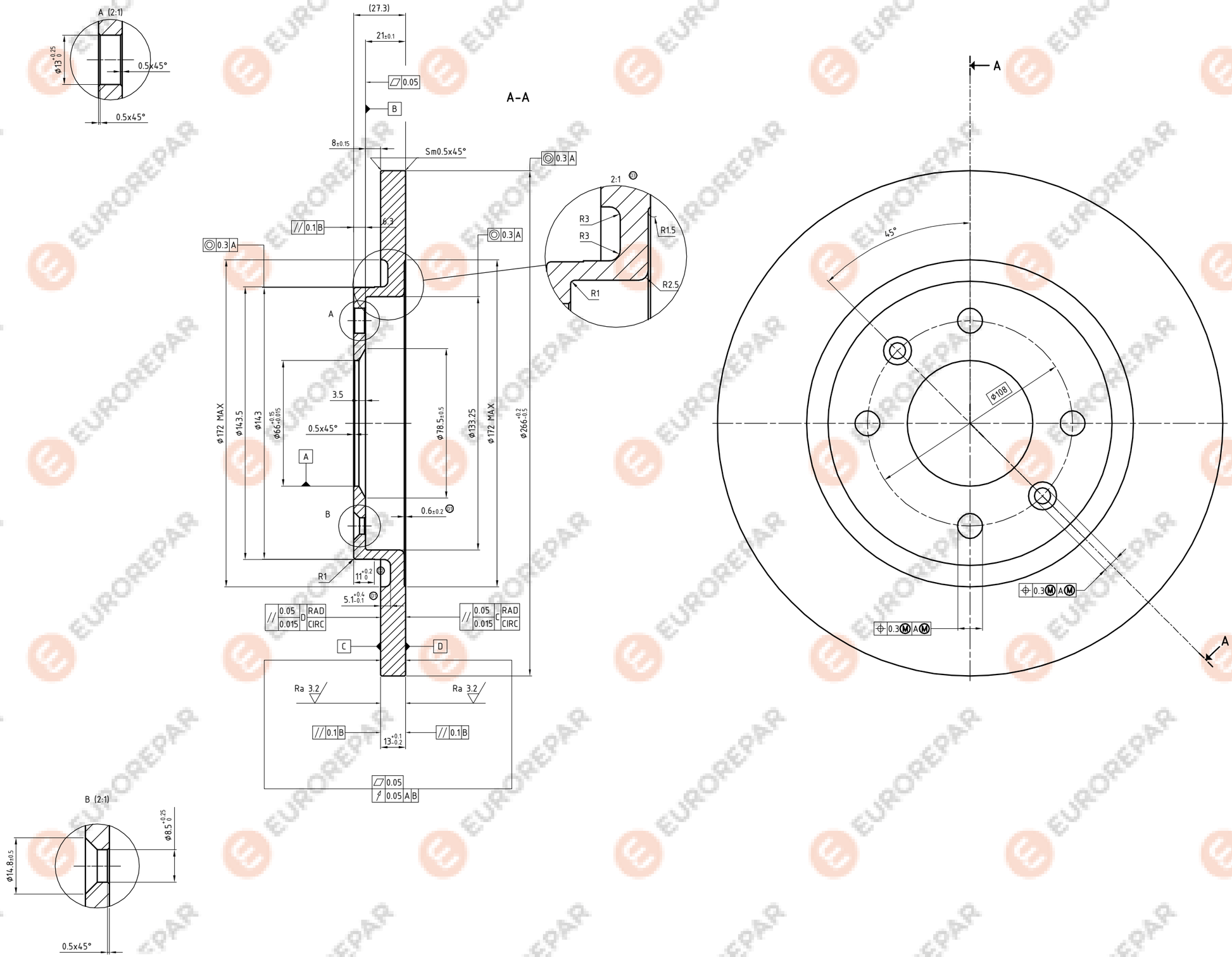
A (2:1)
ø13 +0.25 0
0.5x45°
0.5x45°
(27.3)
21±0.1
0.05
B
A-A
8±0.15
Sm0.5x45°
0.3 A
2:1
R3
R3
R1.5
R2.5
R1
0.1 B
6.3
0.3 A
0.3 A
A
3.5
0.5x45°
A
B
0.6±0.2
R1
11 +0.2 0
5.1 +0.4 −0.1
0.05 0.015 D RAD CIRC
0.05 0.015 C RAD CIRC
C
D
Ra 3.2
Ra 3.2
0.1 B
0.1 B
13 +0.1 −0.2
0.05
0.05 A B
ø172 MAX
ø143.5
ø143
ø66 +0.15 −0.015
ø78.5±0.5
ø133.25
ø172 MAX
ø266 +0.2 −0.5
A
45°
ø108
0.3 M A M
0.3 M A M
A
B (2:1)
ø8.5 +0.25 0
ø14.8±0.5
0.5x45°

EUROREPAR